Exploded view

Explodierte Ansicht | Dessin technique | Rozkres
Vista en despiece ordenado

DNR 200

Exploded view 1/1

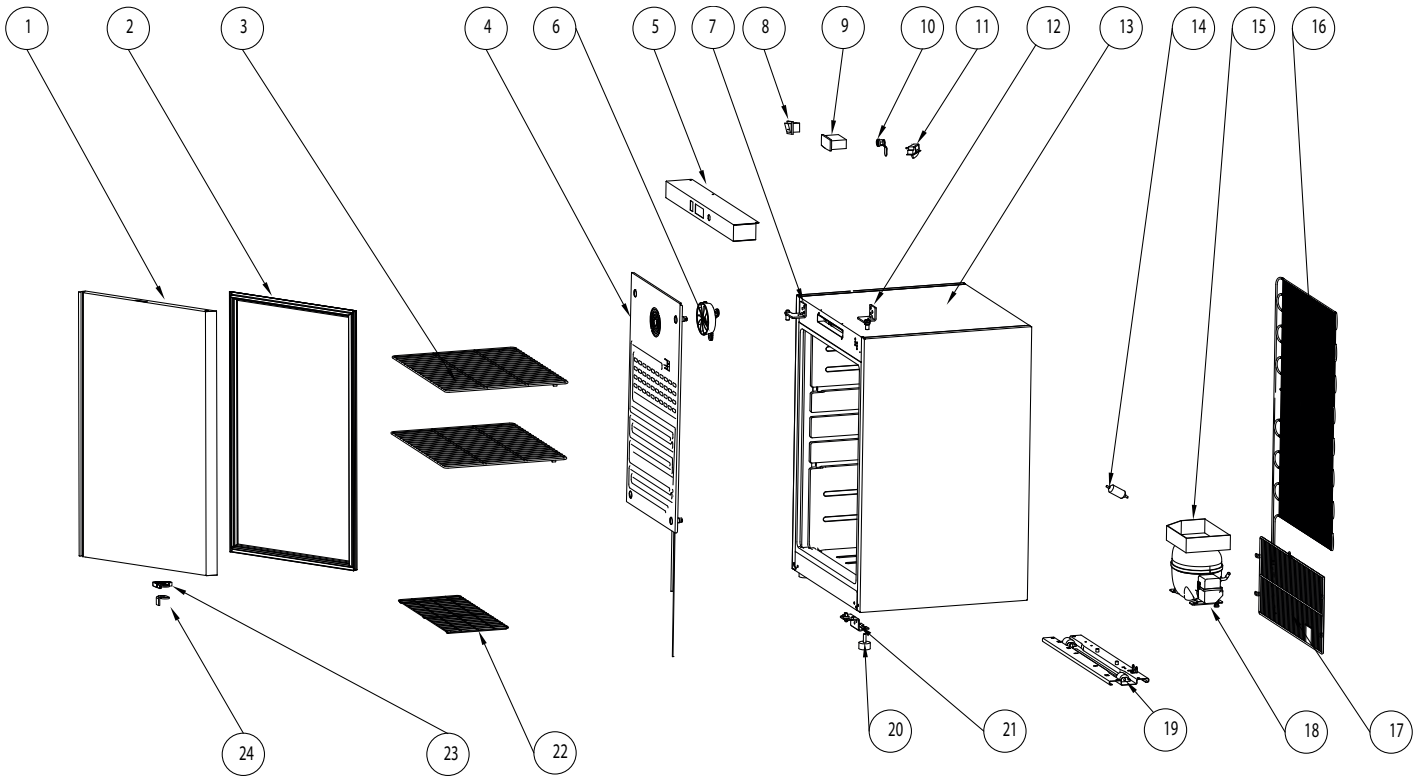

Exploded view

Explodierte Ansicht | Dessin technique | Rozkres
Vista en despiece ordenado

DNR 200

ARTICLE	NUMBER	POSITION
Door	WR20.01A	1
Gasket	WR20.02	2
Shelf	WR20.03	3
Evaporator	WR20.04	4
Front Panel	WR20.05A	5
Evaporator Fan	WR40.08	6
Left Top Hinge	WR20.13A	7
Main Swich	GN1100TN.30	8
Controller	GN1100TN.29	9
Lock	WR40.06	10
Fan Switch	WR40.09	11
Right Top Hinge	WR20.14A	12
Body	WR20.06	13
Filter Drier	WR60.13	14
Water Tray	WR60.12	15
Condensor	WR20.07	16
Back Net	WR20.08	17
Compressor Unit	WR20.09A	18
Compressor Broad	WR20.10	19
Adjustable Feet	S900 STD.38	20
Bottom Hinge	WR40.11A	21
Small Shelf	WR20.11	22
Door Closing Stop	WR40.13	23
Door Opening Stop	WR40.12	24